# TYPE 300 SHORT HANDWHEEL
# (RISING STEM)

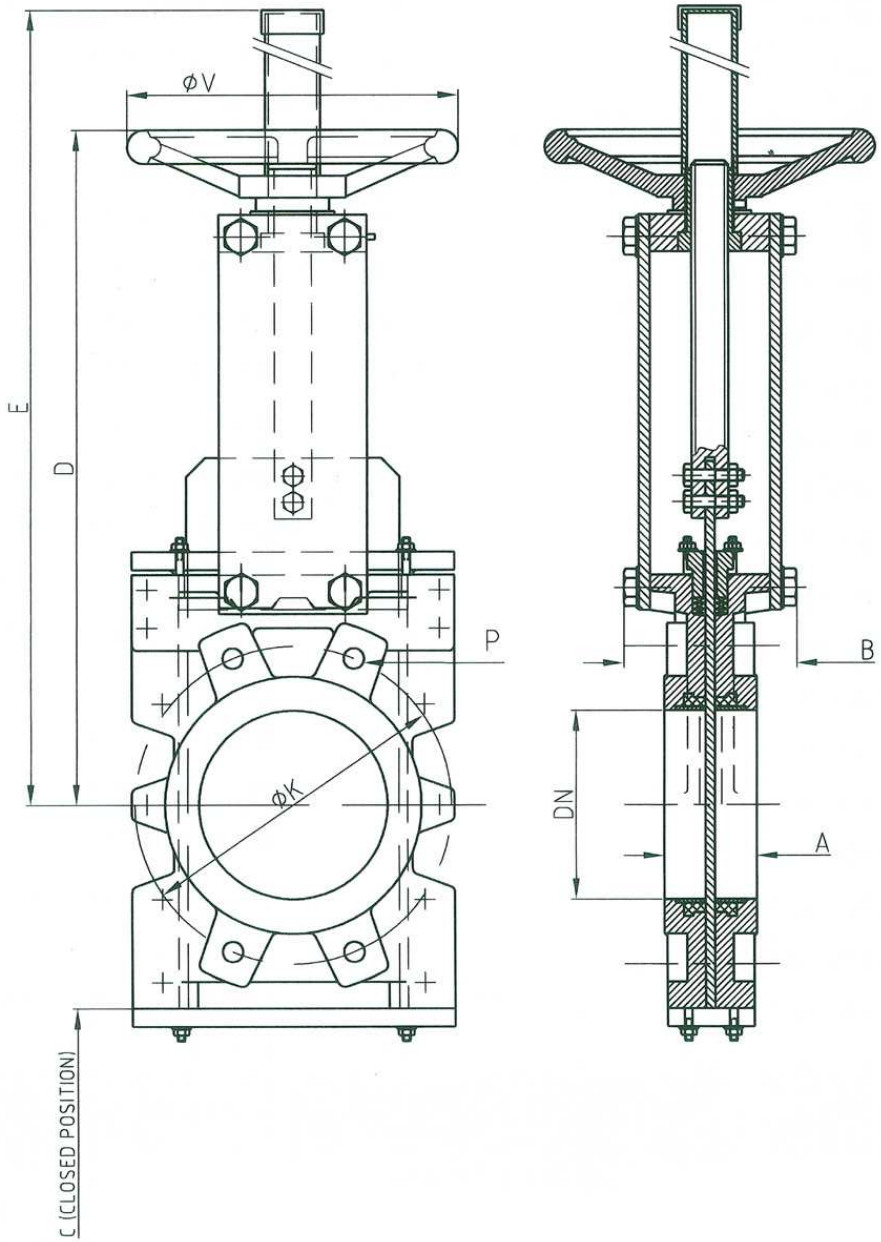


| DN | INCHES | A | B | C | D | E | ØV |
|---|---|---|---|---|---|---|---|
| 50 | 2" | 40 | 90 | | 284 | 425 | 200 |
| 65 | 2 1/2" | 40 | 90 | | 308 | 450 | 200 |
| 80 | 3" | 50 | 90 | | 334 | 480 | 200 |
| 100 | 4" | 50 | 90 | | 374 | 520 | 200 |
| 125 | 5" | 50 | 100 | | 413 | 600 | 250 |
| 150 | 6" | 60 | 100 | 150 | 465 | 650 | 250 |
| 200 | 8" | 60 | 120 | 160 | 582 | 820 | 300 |
| 250 | 10" | 70 | 120 | | 682 | 1020 | 300 |
| 300 | 12" | 70 | 120 | | 782 | 1120 | 300 |
| 350 | 14" | 96 | 192 | 285 | 898 | 1380 | 400 |
| 400 | 16" | 100 | 192 | 310 | 1003 | 1490 | 400 |
| 450 | 18" | 106 | 192 | | 1093 | 1580 | 500 |
| 500 | 20" | 110 | 192 | | 1207 | 1690 | 500 |
| 600 | 24" | 110 | 290 | | 1410 | 2030 | 500 |

*Higher diameters under request.

| DN | INCHES | Ø K | | P | | |
|---|---|---|---|---|---|---|
| | | PN 10 | ANSI 150 | NO.HOLES | PN 10 | ANSI 150 |
| 50 | 2" | 125 | 120,6 | 4 | M16 | W 5/8" |
| 65 | 2 1/2" | 145 | 139,7 | 4 | M16 | W 5/8" |
| 80 | 3" | 160 | 152,4 | 8 | M16 | W 5/8" |
| 100 | 4" | 180 | 190,5 | 8 | M16 | W 5/8" |
| 125 | 5" | 210 | 215,9 | 8 | M16 | W 3/4" |
| 150 | 6" | 240 | 241,3 | 8 | M20 | W 3/4" |
| 200 | 8" | 295 | 298,4 | 8 | M20 | W 3/4" |
| 250 | 10" | 350 | 361,9 | 12 | M20 | W 7/8" |
| 300 | 12" | 400 | 431,8 | 12 | M20 | W 7/8" |
| 350 | 14" | 460 | 476,2 | 16 | M20 | W 1" |
| 400 | 16" | 515 | 539,7 | 16 | M24 | W 1" |
| 450 | 18" | 565 | 577,8 | 20 | M24 | W 1 1/8" |
| 500 | 20" | 620 | 635 | 20 | M24 | W 1 1/8" |
| 600 | 24" | 725 | 749,3 | 20 | M27 | W 1 1/4" |